IUI Industrial unit for inspection

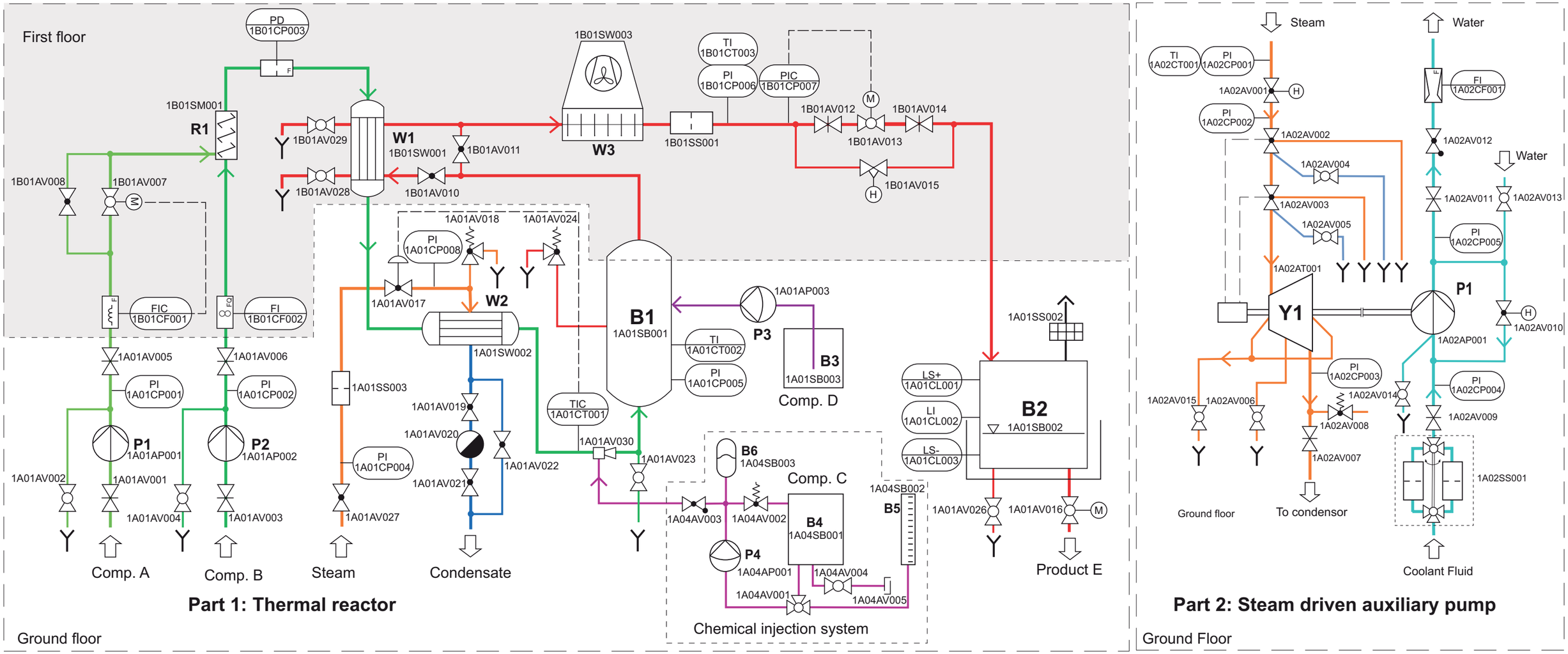

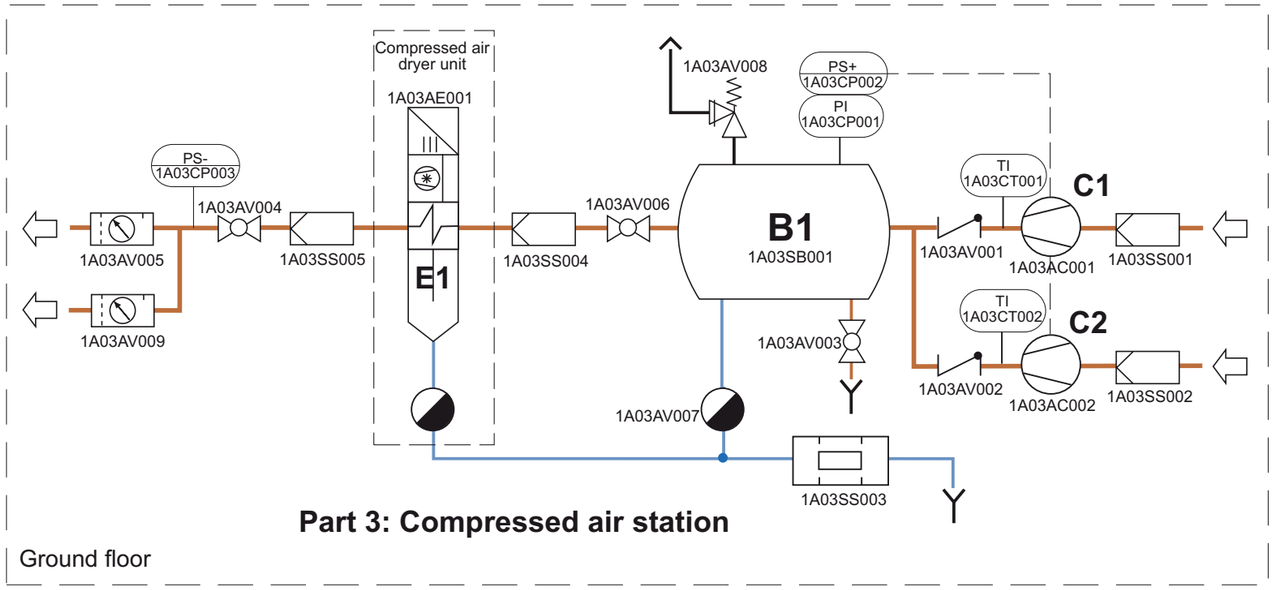

Used symbols

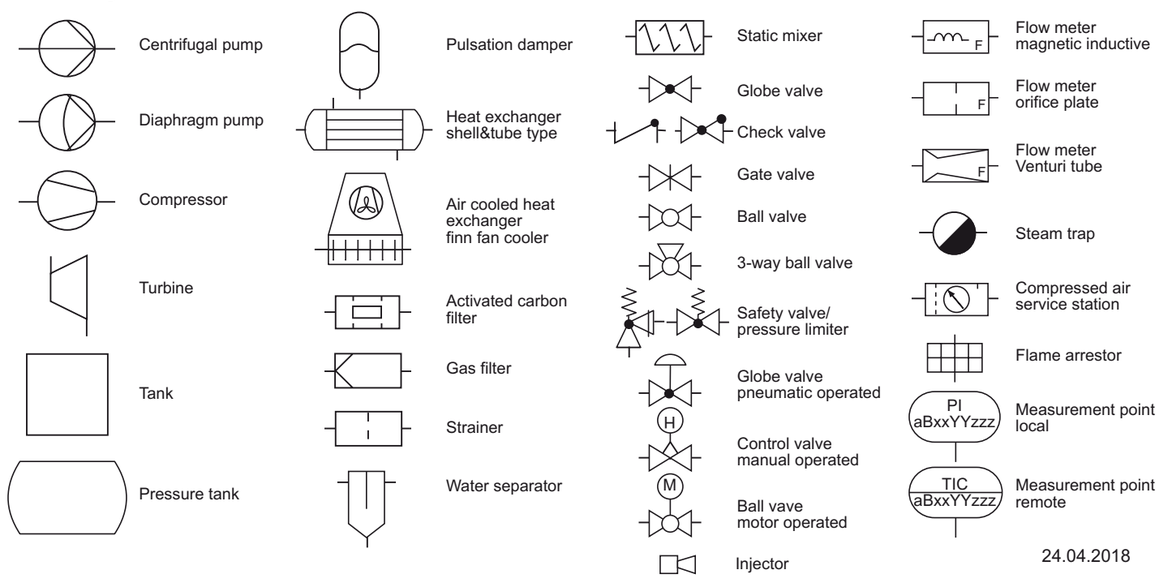

24.04.2018

IUI All.cdr